030-1425
Inside Bezel & Release Lever Assembly

This redesigned product functions as a remote inside release and features a built-in lock lever and improved zinc die cast bezel for durability and ease of installation. It is also available in non-locking and power locking versions.

DESIGNED FOR:

- Remote interior release and locking applications for on or off-highway
- Light to medium duty recommended
- Use with Tri*Mark* latch/logic mechanisms

Bookmark TriMark at TriMark Interactive Product Selector
www.trimarkcorp.com

Tri*Mark* Corporation
500 Bailey Avenue
P.O. Box 350
New Hampton, Iowa 50659
United States
Tel: 641-394-3188
Fax: 641-394-2392
1-800-447-0343
www.trimarkcorp.com

10002707 QM08 ISO 9001: 2008
10002707 TS09 ISO/TS 16949: 2009
TriMark Corporation

Tri*Mark* Europe
Cedar Court
Walker Road
Bardon Hill
Coalville LE67 1TU
United Kingdom
Tel: +44(0)1530 512460
Fax: +44(0)1530 512461
www.trimarkeu.com

427961 QM08 ISO 9001 : 2008
427961 UM ISO 14001 : 2004
TriMark Europe Ltd.

www.trimarkcorp.com

030-1425 Inside Bezel & Release Lever Assembly

FEATURES/BENEFITS:
- Offers modern automotive styling
- Built-in lock lever for added security
- Remote mounting provides versatility and flexibility

AVAILABLE:
- Right or left hand configurations (right hand shown)
- Cutout for power door lock
- Non-locking bezel also available
- As a complete assembly or separate components for application flexibility

MATERIAL:
- Bezel and release lever die cast zinc alloy
- Lock lever -- engineered plastic
- Stamped steel mounting brackets

FINISH:
- Bezel: Black powder coated
- Release lever: Black powder coated or chrome plate
- Lock lever: Black or chrome finish
- Zinc plated clear chromate steel components

INSTALLATION:
- Fasteners supplied for mounting inside bezel

Design Patent No: D598,729 / D588,895

Individual part dimensions are for reference only. Refer to individual part drawings for complete dimensions, specifications, and installation procedures. Engineering assistance and application drawings are available.

CAUTION: Applications of this product may fall within the requirements of FMVSS 206 and SAE J839 safety standards. These safety related requirements are dependent on door application, e.g. front and rear hinged doors, sliding doors, or hinged upward swinging doors. The entire door hardware system must be included in the design/analysis process latch, handle, lock mechanism, cables/rods/linkages, fasteners, hinges, etc. This ensures compatibility of all components within the hardware system. If FMVSS 206 is a requirement, then all of the components within the door system must comply with strength, inertia and locking requirements as specified within the Standard. Note that this product complies with FMVSS 206 when tested in accordance with SAE J839 and that this product meets FMVSS 206 locking requirements and may be used in FMVSS 206 applications pending Tri*Mark* application approval.

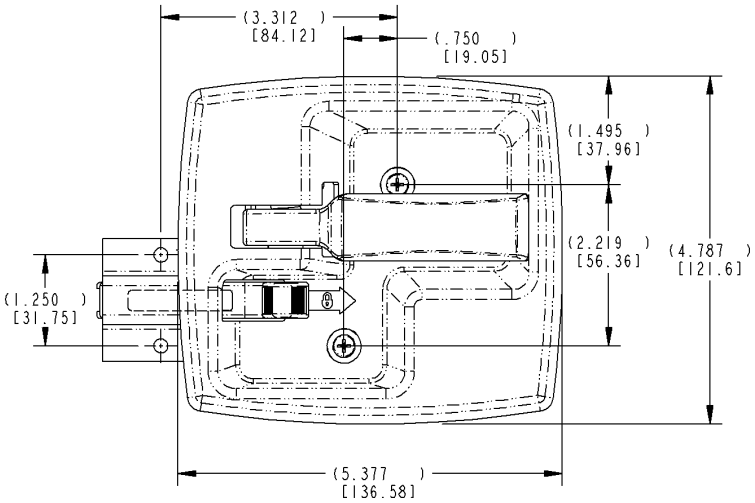

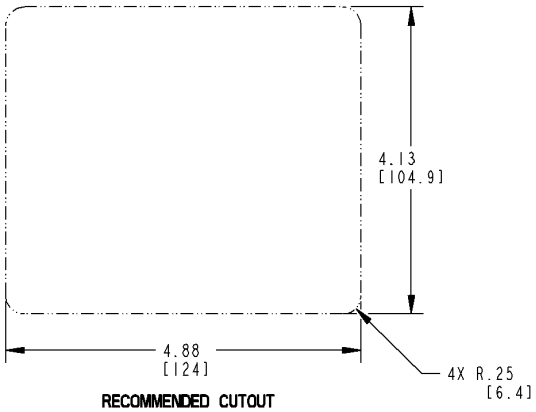

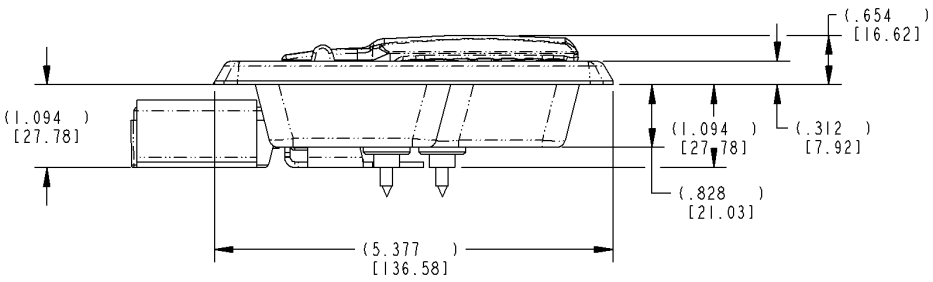

For more information visit www.trimarkcorp.com